TECH PUBLIC
台舟电子

TPESD5Z24
1-Line Uni-directional TVS Diode

www.sot23.com.tw

Features

- 150 Watts peak pulse power (tp = 8/20μs)
- Transient protection for high speed data lines to
  IEC 61000-4-2 (ESD) ±15kV (air), ±8kV (contact)
  IEC 61000-4-4 (EFT) 40A (5/50ns)
- Protects One Power or I/O Port
- Low leakage current
- Low operating and clamping voltages
- Solid-state silicon avalanche technology

Mechanical Characteristics

- Package: SOD-523
- Lead Finish: Matte Tin
- Case Material: “Green” Molding Compound.
- UL Flammability Classification Rating 94V-0
- Moisture Sensitivity: Level 3 per J-STD-020
- Terminal Connections: See Diagram Below

Applications

- Cellular Handsets and Accessories
- Personal Digital Assistants
- Notebooks and Handhelds
- Portable Instrumentation
- Digital Cameras
- Peripherals
- Audio Players
- Keypads, Side Keys, LCD Displays, USB2.0

Ordering Information

Part Number	Qty per Reel	Reel Size
TPESD5Z24	3000	7″

TECH PUBLIC

Dimensions and Pin Configuration

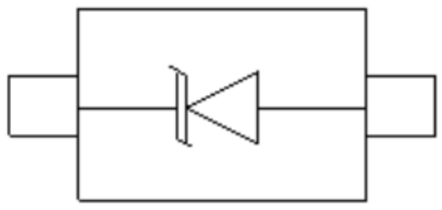

SOD-523 (Top View)

Absolute Maximum Ratings (T_A=25°C unless otherwise specified)

Parameter	Symbol	Value	Unit
ESD per IEC 61000−4−2 (Air) ESD per IEC 61000−4−2 (Contact)	V_{ESD}	±15 ±8	kV
Operating Temperature Range	T_J	−55 to +125	°C
Storage Temperature Range	Tstg	−55 to +150	°C

Electrical Characteristics (T_A=25°C unless otherwise specified)

Symbol	Parameter
I_{PP}	Maximum Reverse Peak Pulse Current
V_C	Clamping Voltage @ I_{PP}
V_{RWM}	Working Peak Reverse Voltage
I_R	Maximum Reverse Leakage Current @ V_{RWM}
V_{BR}	Breakdown Voltage @ I_T
I_T	Test Current
I_F	Forward Current
V_F	Forward Voltage @ I_F
P_{pk}	Peak Power Dissipation
C	Capacitance @ V_R = 0 and f = 1.0 MHz

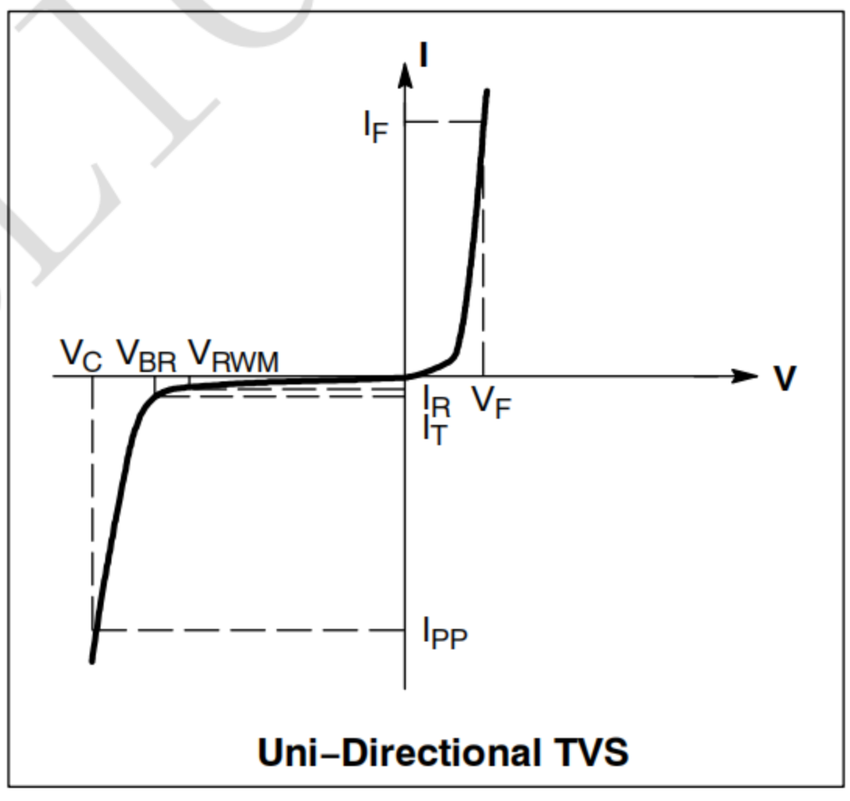

Uni−Directional TVS

Parameter	VRWM @IR		VBR@ImA	VC@1A	VC@IPP		CJ
	V	μA	V	V	V	A	pF
		MAX	MIN	MAX	MAX		MAX
TPESD5Z24	24	1	26.7	43	56	3	30

TECH PUBLIC

Characteristic Curves

Fig1. 8/20μs Pulse Waveform

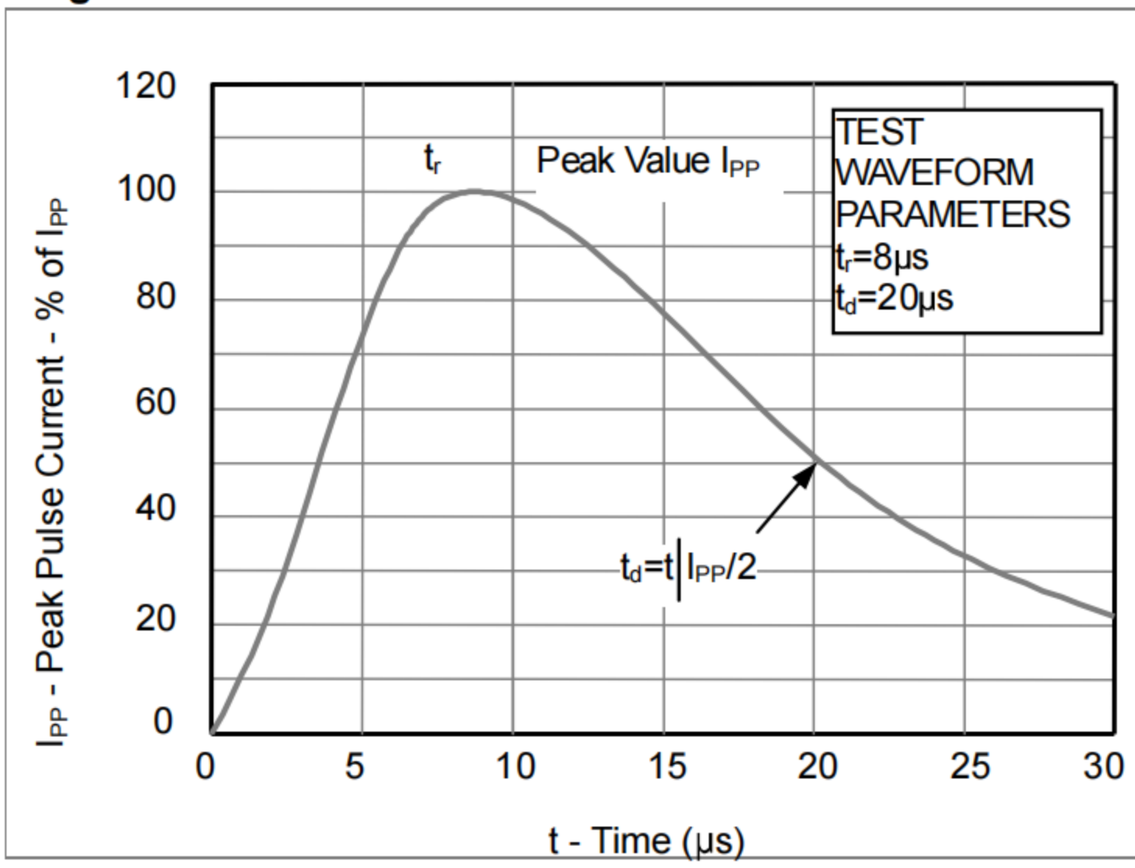

Fig2. ESD Pulse Waveform (according to IEC 61000-4-2)

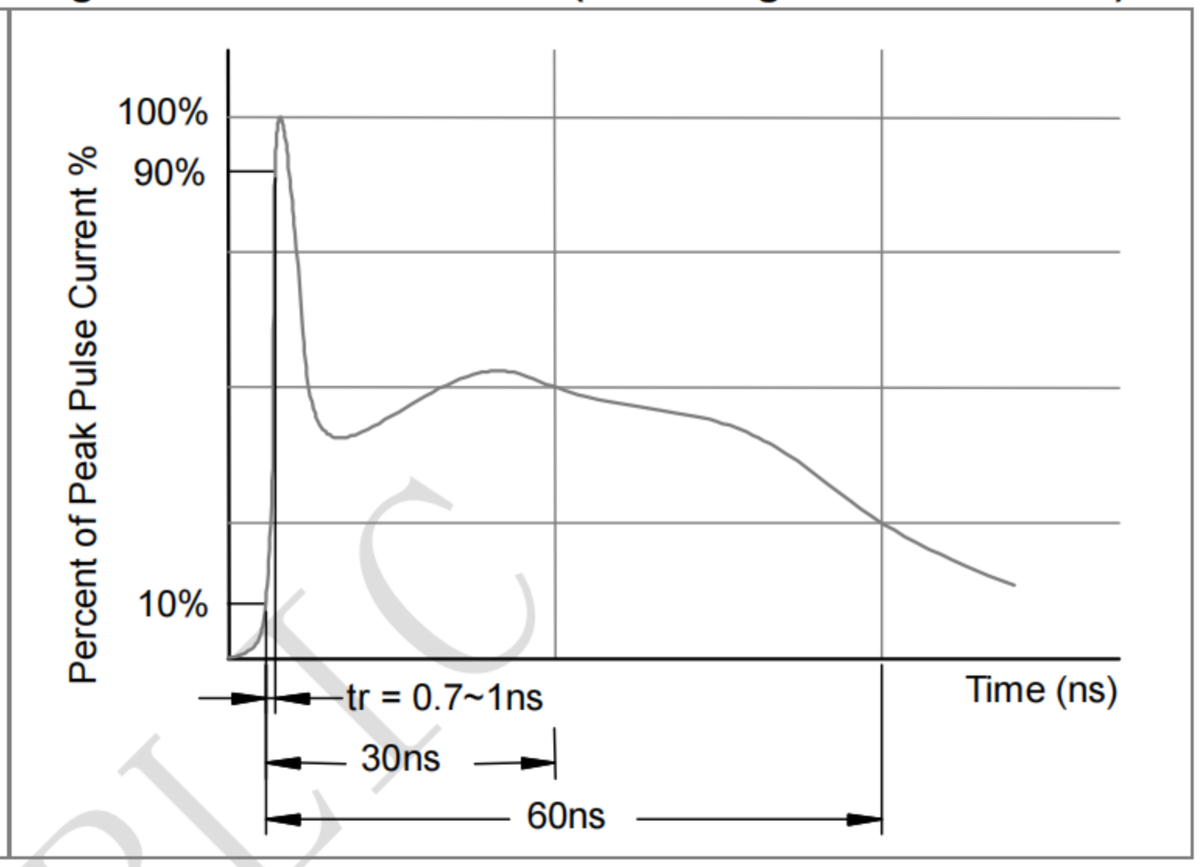

Fig3. Power Derating Curve

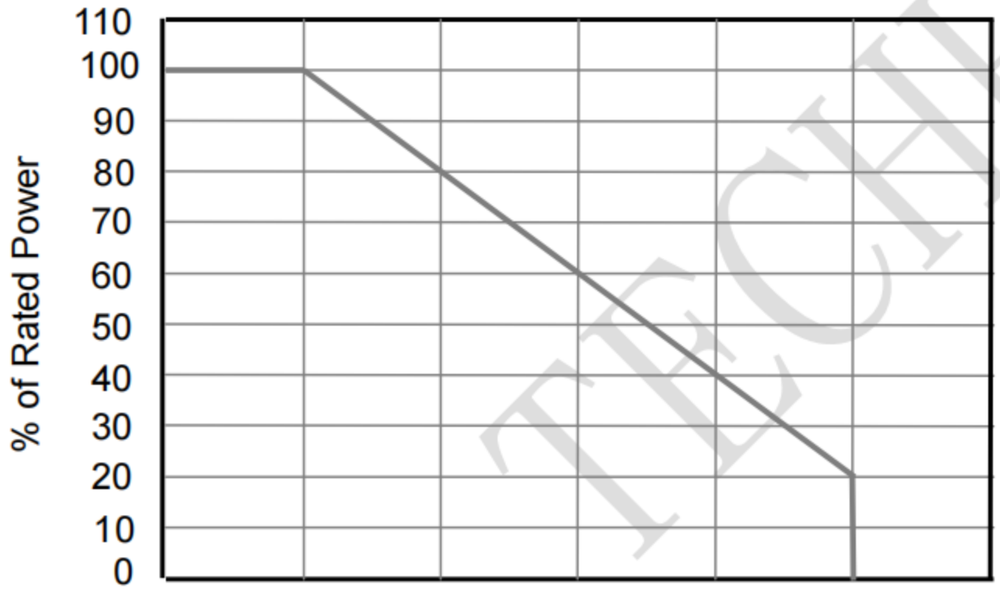

TECH PUBLIC

SOD-523 Package Outline Drawing

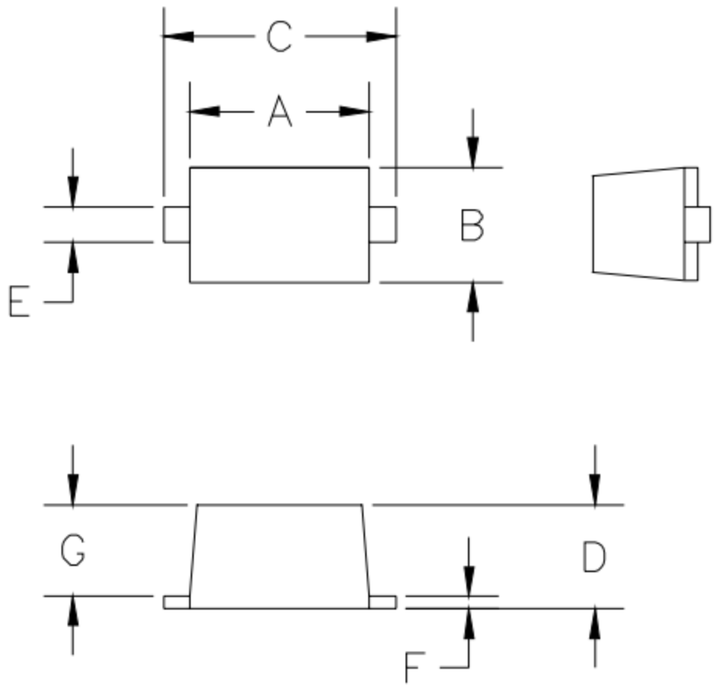

DIMENSIONS					
DIMN	INCHES		MM [1]		NOTE
	MIN	MAX	MIN	MAX	
A	.043	.051	1.10	1.30	–
B	.028	.035	0.70	0.90	–
C	.059	.067	1.50	1.70	–
D	.020	.028	0.50	0.70	–
E	.010	.014	0.25	0.35	–
F	.004	.008	0.10	0.20	–
G	.020	.028	0.50	0.70	–

[1] CONTROLLING DIMENSION: MILLIMETERS

Suggested Land Pattern

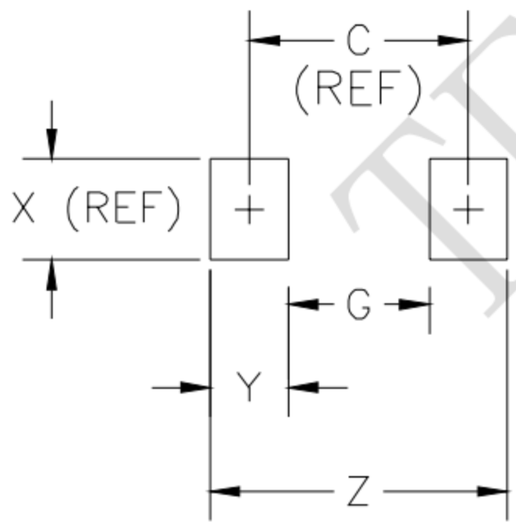

DIMENSIONS					
DIMN	INCHES		MM [1]		NOTE
	MIN	MAX	MIN	MAX	
C	–	.067	–	1.70	REF
G	–	.043	–	1.10	–
X	–	.031	–	0.80	REF
Y	–	.024	–	0.60	–
Z	–	.091	–	2.30	–

[1] CONTROLLING DIMENSION: MILLIMETERS

TECHPUBLIC