TECH PUBLIC
台舟电子

TPE05RUL

Low Capactionce 1-Line Uni-directional TVS Diode

www.sot23.com.tw

Features

- Low operating voltage: 5V
- Ultra low capacitance: 0.5pF typical
- Ultra low leakage: nA level
- Low clamping voltage
- 2-pin leadless package
- Complies with following standards:
- – IEC 61000-4-2 (ESD) immunity test
  Air discharge: ±30kV
  Contact discharge: ±25kV
- – IEC61000-4-5 (Lightning)4A (8/20μs)
- RoHS Compliant
- Lead Finish: NiPdAu

Mechanical Characteristics

- Package: SOD323
- Lead Finish: Matte Tin
- Case Material: “Green” Molding Compound.
- Moisture Sensitivity: Level 3 per J-STD-020
- Terminal Connections: See Diagram Below

Applications

- Serial ATA
- PCI Express
- Desktops, Servers and Notebooks
- Cellular Phones
- MDDI Ports
- USB2.0/3.0 Power and Data Line Protection
- Display Ports
- High Definition Multi-Media Interface (HDMI)
- Digital Visual Interfaces (DVI)

Ordering Information

Part Number	Qty per Reel	Reel Size
TPE05RUL	3000	7″

Dimensions and Pin Configuration

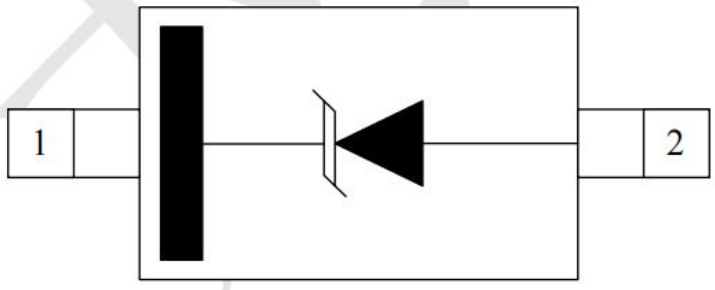

SOD-323
(Top View)

Marking: 1Tx

1t = Device code
x= Month code

Absolute Maximum Ratings (Tamb=25°C unless otherwise specified)

Parameter	Symbol	Value	Unit
Peak Pulse Power (8/20μs)	Ppk	65	W
Peak Pulse Current (8/20μs)	Ipp	4	A
ESD per IEC 61000−4−2 (Air) ESD per IEC 61000−4−2 (Contact)	VESD	±30 ±25	kV
Operating Temperature Range	TJ	−55 to +125	°C
Storage Temperature Range	Tstg	−55 to +150	°C

Electrical Characteristics (TA=25°C unless otherwise specified)

Parameter	Symbol	Min	Typ	Max	Unit	Test Condition
Reverse Working Voltage	VRWM			5	V	
Breakdown Voltage	VBR	6.5	7.5	9.0	V	IT = 1mA
Reverse Leakage Current	IR			0.08	uA	VRWM = 5V
Clamping Voltage	VC			10	V	Ipp=1A(8x 20us pulse)
Clamping Voltage	VC			14	V	Ipp=4A(8x 20us pulse)
Junction Capacitance	CJ		0.5	0.9	pF	VR = 0V, f = 1MHz, Pin 1 to Pin 2

Typical Performance Characteristics (T_A=25°C unless otherwise Specified)

Fig1. 8/20μs Pulse Waveform

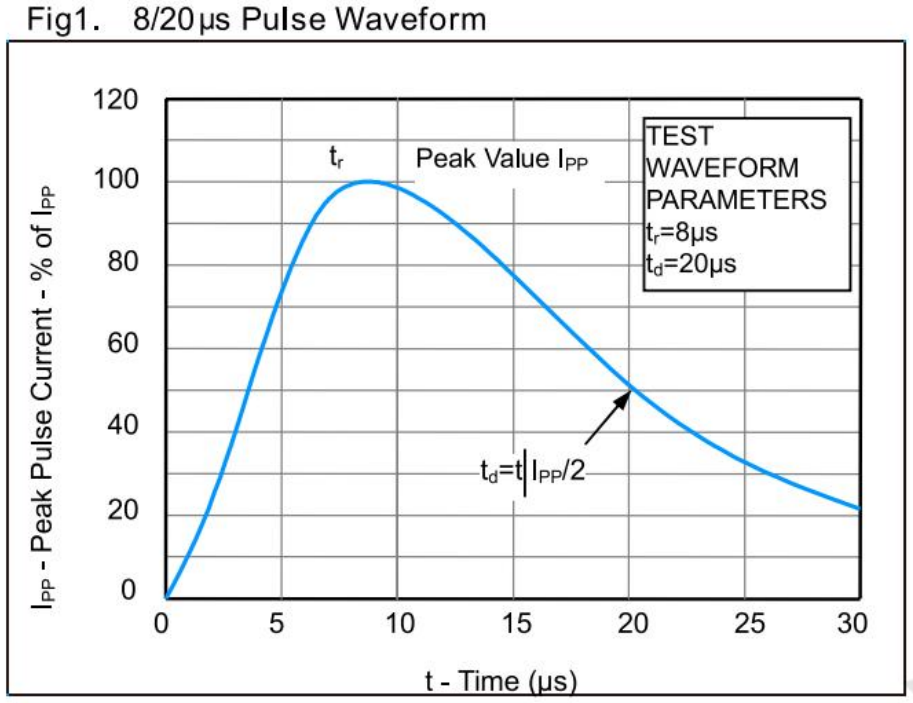

Fig2. ESD Pulse Waveform (according to IEC 61000-4-2)

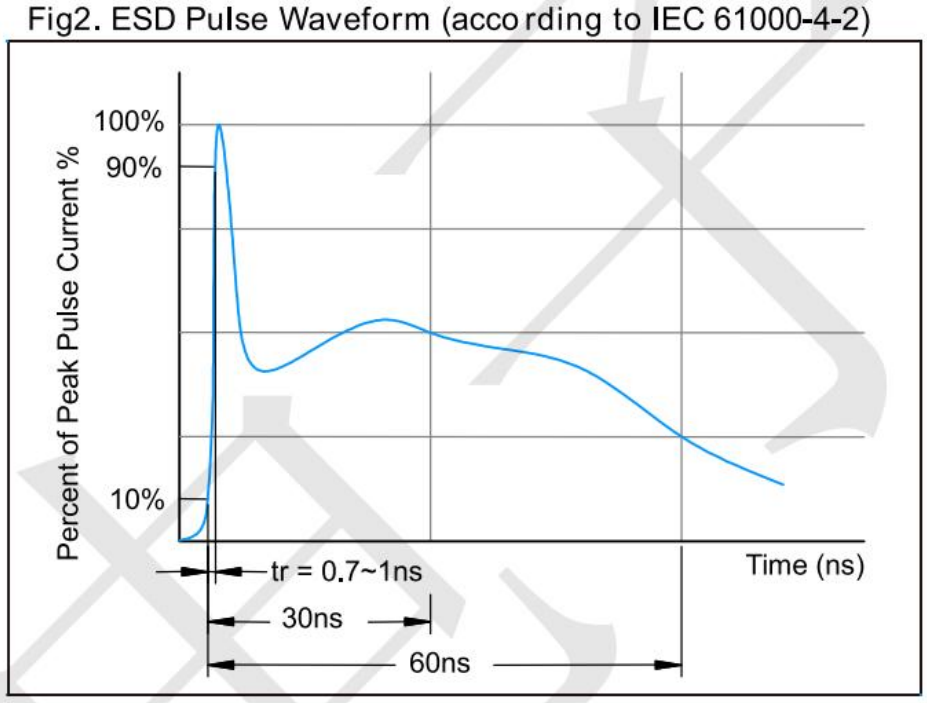

Fig3. Power Derating Curve

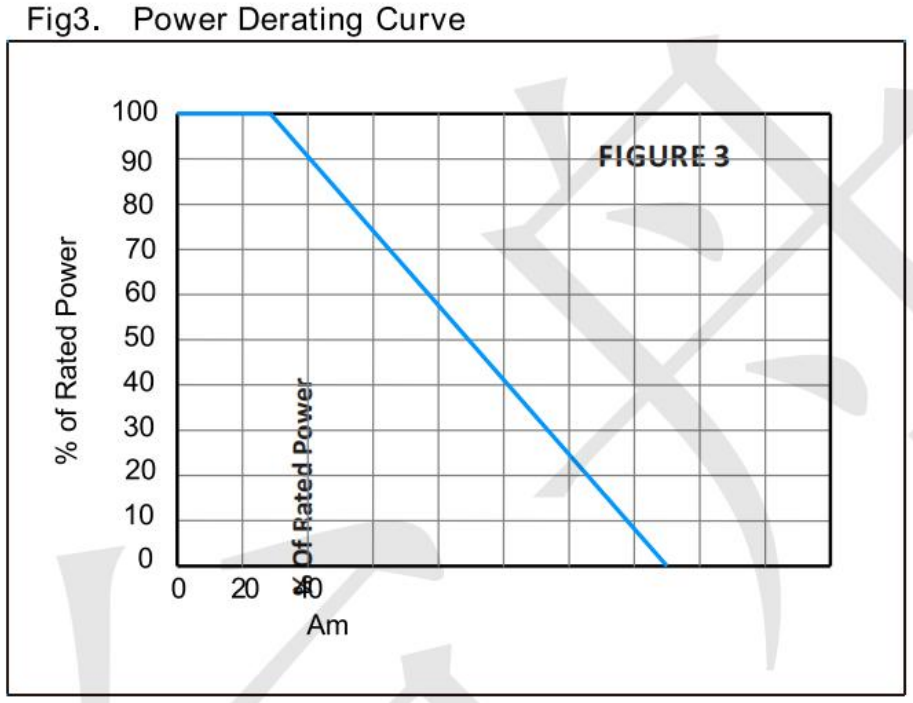

Outline Drawing - SOD-323

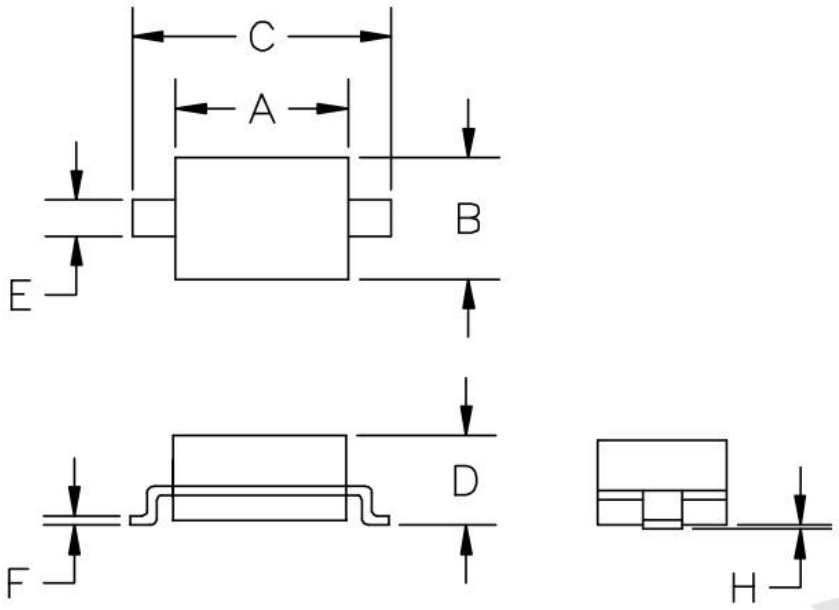

SYM	DIMENSIONS			
	MILLIMETERS		INCHES	
	MIN	MAX	MIN	MAX
A	1.50	1.80	0.060	0.071
B	1.20	1.40	0.045	0.054
C	2.30	2.70	0.090	0.107
D	-	1.10	-	0.043
E	0.30	0.40	0.012	0.016
F	0.10	0.25	0.004	0.010
H	-	0.10	-	0.004

Land Pattern - SOD-323

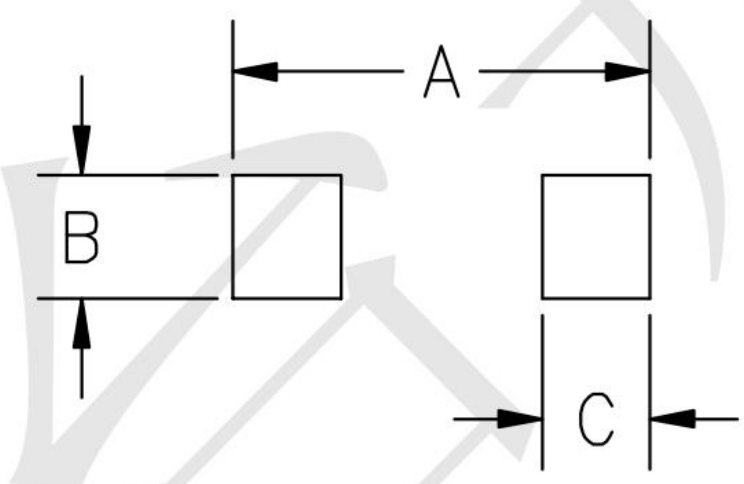

SYM	DIMENSIONS	
	MILLIMETERS	INCHES
A	3.15	0.120
B	0.80	0.031
C	0.80	0.031